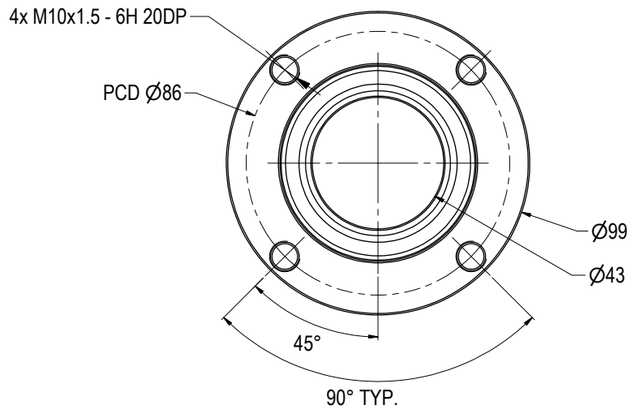

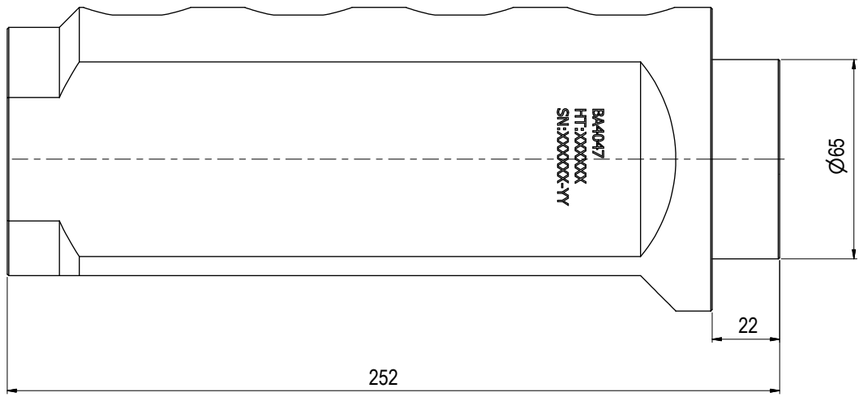

NOTE: 1
DESIGN CODE:
API 17H
ISO 13628-8

NOTE: 2
TECHNICAL CLASSIFICATION:

Article Type:	001-Hot Stabs
Main Group:	1.03. Ø43 Hot Stab
Intermediate Group:	1.2.02. Receptacle
Sub Group:	1.2.6.04. Quad

NOTE: 3
INTERFACE INFORMATION:

Pressure Rating Bar:	690
Design Water Depth:	N/A
Material:	S32750 SUPER DUPLEX
Weight:	8,5 kg
Volume:	1,08 dm^3
Submerged Weight:	7,39 kg
Surface Area:	1243 cm^2
Hydraulic:	1/2" BSP
Mechanical:	4xM10@PCD 86
Electrical:	N/A
Com. & Protocol:	N/A

NOTE: 4
ADDITIONAL INFORMATION:
Other hydraulic port interface can be delivered on customers request.

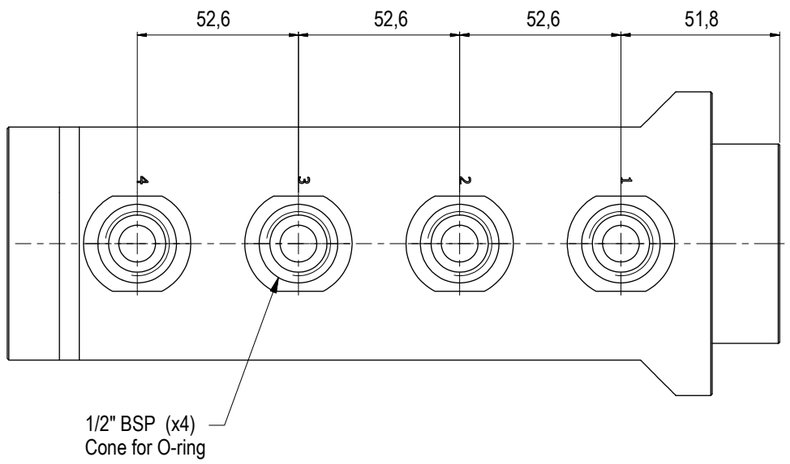

Rev.	Date	Reason for issue	Revision change	Made	Chk'd	Appr.
02	6.5.2014	9-IFU (Issued for Use)		WTJ	HNJ	WTJ
01	27.9.2013	7-IFC (Issued for Construction)		HNJ	LAE	HNJ

BLUE LOGIC

This Drawing is the Property of Blue Logic AS © and must Not be Loaned, Reproduced or Transferred to others without written Permission

Dwg Scale: NTS
Dwg Proj:
Dwg Format: A3

Drawing title: Ø43 QP Rec 10k Interv BSP 1/2"

Drawing number: BA4047

Rev. 02